UNIQUE
LIGHTING SYSTEMS®

Lamps
MR16 LED Lamp
FLEX GOLD™ VIVID Series

FLEX GOLD™ VIVID Series LED Lamp

PROJECT:	

TYPE:	
CATALOG NUMBER:	
LAMP(S):	
NOTES:	

TYPE: MR16 - CCT
POWER: 5 Watt
CONTROL: Bluetooth, app controlled
VOLTAGE RANGE: 10 -15 VAC
LUMEN: Dimmable from 10 to 446 lumen
LAMP LIFE: 25,000 hr.
BEAM SPREAD: 40° Flood
COLOR TEMP.: Adjustable from 2700K / 6500K
VOLT AMPS: 6.4

Dimensions:
All dimensions in mm.

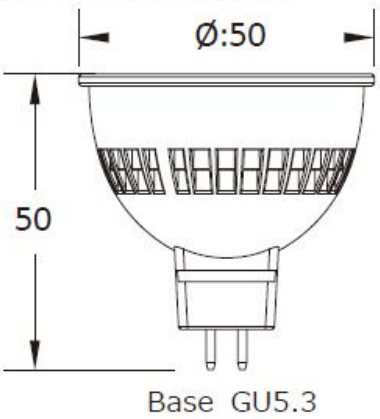

MODEL NUMBER	LAMP FACTS
LED-5W-AM6FL-CCT	• 80 % more efficient than halogen equivalent • LED produces zero UV • Mercury free • 80 or above CRI (Color Rendering Index) • Five year warranty

FLEX GOLD™ VIVID app available on:

GET IT ON Google Play

Download on the App Store

* Android™ and the Android™ logo are trademarks or registered trademarks of Google Inc.
* iOS® is a trademark or registered trademark of Cisco in the U.S. and other countries.

Unique Lighting Systems®
www.uniquelighting.com
5825 Jasmine Street
Riverside, CA 92504
T 800-955-4831
F 800-955-9852