CUSTOMER REFERENCE DRAWING

REV.	ECN # IF APPLIC.	REVISION DESCRIPTION	REQ'D. BY	DRAFTER	DATE
1	NA	ORIGINAL RELEASED VERSION	NA	AC	1/16/17

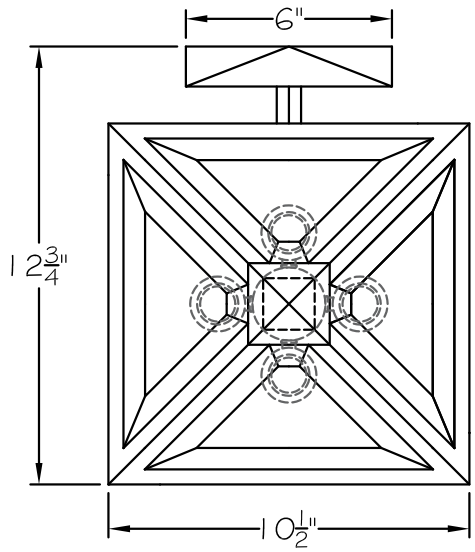

TOP VIEW

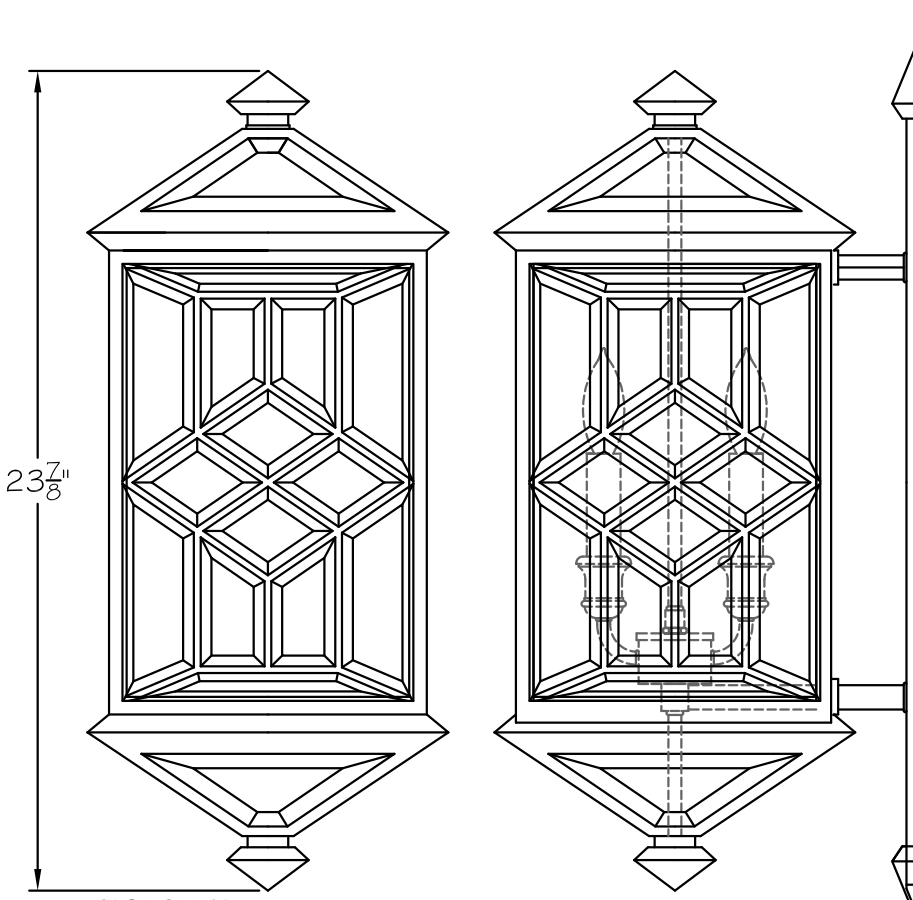

FRONT VIEW

SIDE VIEW

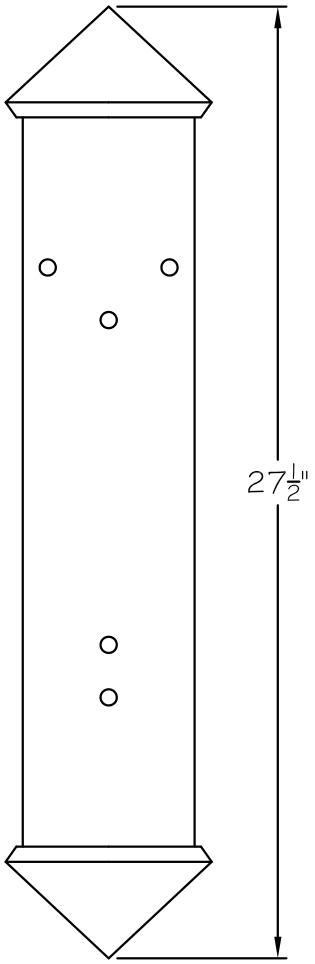

BACK PLATE

Fine Art LAMPS

This drawing and specifications are the exclusive property of BLUMBERG INDUSTRIES, INC. issued in strict confidence and shall not, without the prior written permission of BLUMBERG INDUSTRIES, INC., be produced, copied or used for any purpose whatsoever except the manufacture articles for FINE ART LAMPS.

5770-5772 Miami Lakes Dr. East / Miami Lakes, FL 33014
Ph:(305) 821-3850 FAX:(305) 821-1564

STYLE NUMBER: 881081

PART NUMBER:

CUST. REFERENCE TEMPLATE	DRAFTER: AC	STYLE ENGINEER:	DATE: 1/16/17	REVISION: 1	SHEET: 1