PATH LIGHTING

LIGHTCRAFT OUTDOOR

PROJECT	DATE
TYPE	CATALOG #

BELLA 4

AP-198B

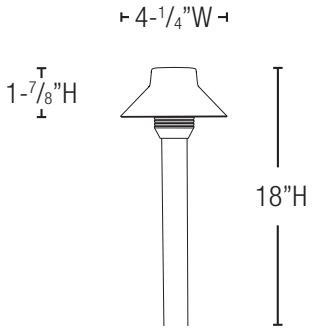

KEY FEATURES

- CAST BRASS
- NATURAL BRONZE FINISH GUARANTEED NOT TO CHIP, FLAKE OR PEEL
- TEMPERED, SHOCK AND HEAT RESISTENT LENS
- HIGH TEMPERATURE CERAMIC SOCKETS
- FIELD REPLACEABLE LED LAMPS

PRODUCT SPECIFICATIONS

DIMENSIONS	18"OAH X 4"W
MATERIAL	CAST BRASS
GLASS	FROST DIFFUSER
LAMP/SOCKET	T3/G4
VOLTAGE	9-15V AC/DC
LIGHT SPREAD	3-5 FT AVG
LEAD WIRE	3 FT

STEP 1

FIXTURE CONFIGURATION

AP-198B [ ]

FINISH

NBZ NATURAL BRONZE

STEP 2

LED LAMP CONFIGURATION

LED-T3 [ ] [ ] [ ]

LED WATTAGE

1.5W 110 LM

2.5W 210 LM

KELVIN TEMPERATURE

27K 2700K

30K 3000K

ENCAPSULATED

ENC ENCAPSULATED (IP67)

STEP 3

ACCESSORY OPTIONS

AX-800P INCLUDED [ ]

STAKE OPTION

AX-800P STANDARD SLOTTED STAKE

AX-802P HEAVY DUTY PERMA POST

+ Dimmable: See ENCAPSULATED T3 LED Lamps Spec Sheet for additional details

Revised 08/18